Code: FP-4-009-	Date of issued:	Ver:

QC issued	ECN No.	Mark	Change matters	Reason for change
		1		
		2		
		3		
		4		

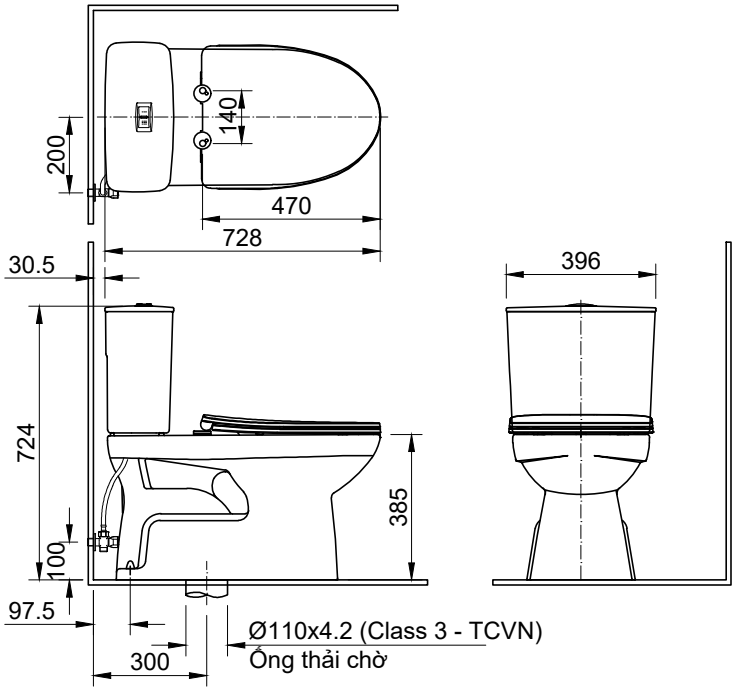

Ghi chú:
- C-514VAN; AC-514VAN đã bao gồm van chặn nước
- C-514VWN; AC-514VWN không bao gồm van chặn nước
- C-514VAN; C-514VWN không có AQUACERAMIC
- AC-514VAN; AC-514VWN có AQUACERAMIC

Material					CODE:	C-514VAN; AC-514VAN C-514VWN; AC-514VWN			Ver. : 01
Surface treatment									
Finnish					TITLE:	CC Toilet			
	SCALE	DESIGN	CHECK	APPROVAL	SUPPLIER	Date: 30.Jul.21	DWG. No:	Part classification	
	1:20	INAX				Confidential Yes No	LIXIL VIETNAM		SHEET 1/1